Alu Profile Accessories/Connectors/2D-3D Connectors

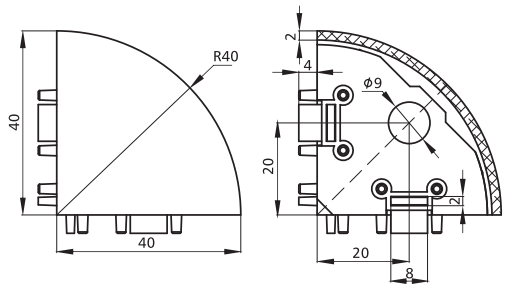

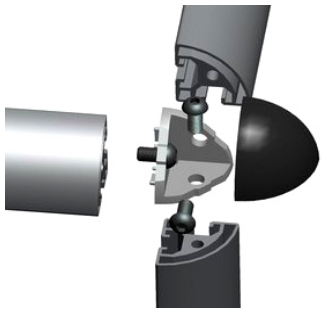

Slot	Item No.	Material	PCS/CTN	KGS/CTN	CTN SIZE(mm)
8	4040-3D-R	Die-cast Zinc+Black Nylon Cap	60	5.40	225*170*180